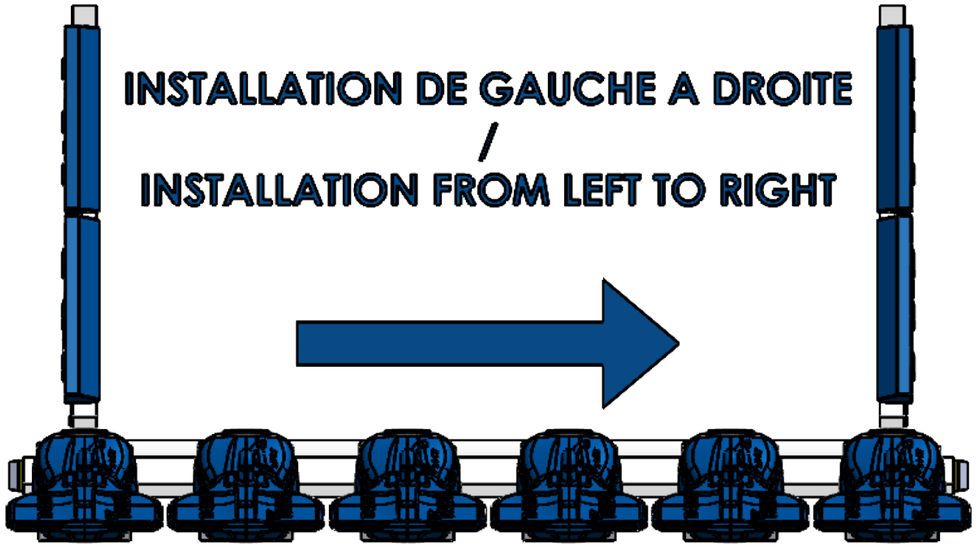

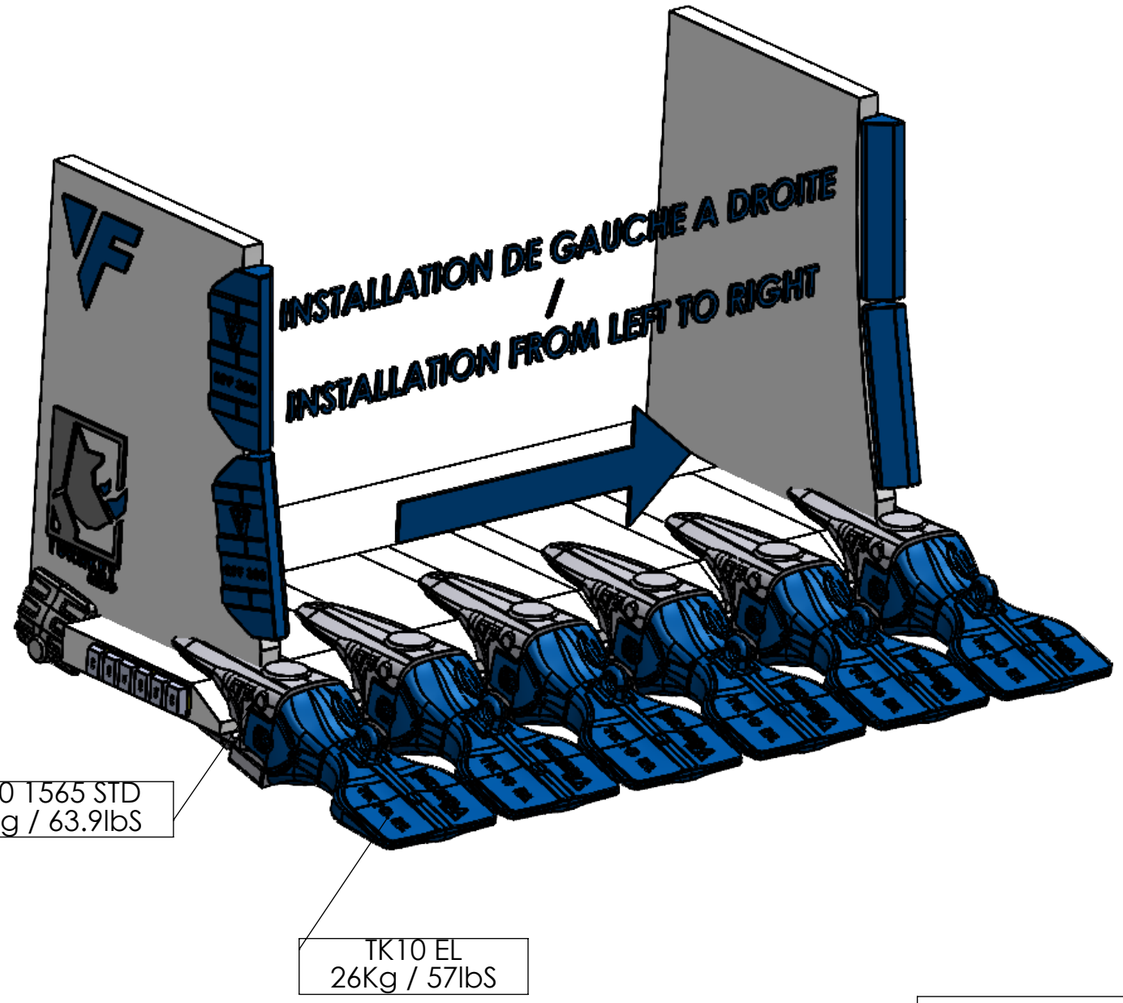

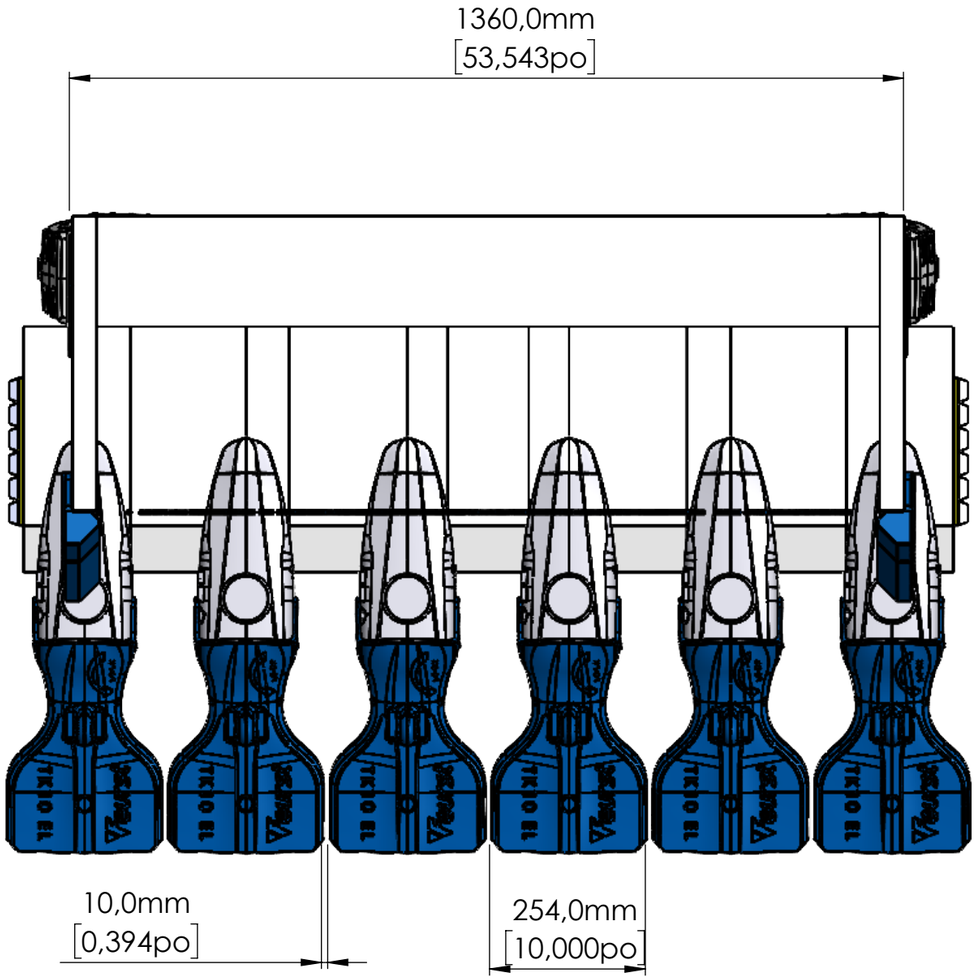

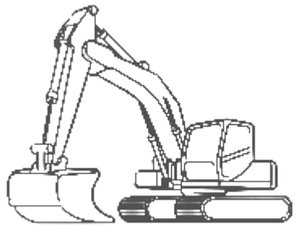

TURNKEY RHINO

Index	Date	Draw	Check	Modifications
0	25/10/2023	EC		

Ce plan (ou schema) est la propriété exclusive de SAFE Metal Toute reproduction et diffusion partielle ou totale sauf accord express écrit de notre part sont strictement interdites - conformément aux dispositions de la loi du 11 mars 1957. Notre responsabilité ne sera pas engagée par la mise en service de notre proposition. Il appartient au client de vérifier la conformité du produit proposé et son aptitude à assurer toutes les fonctions requises.
The information disclosed in this document includes proprietary rigths of SAFE Metal by accepting this document recipient agress that neither this document nor the information disclosed here in nor any part there of shall be reproduce or transfered to other documents or used or disclosed to others for developpement , manufacture or any other purpose except as authorised in writing by SAFE Metal. The acceptance of our new proposals does not commit SAFE Metal to responsability for design or function of the product,it is the customers responsability to verify and ensure themselves the functionality and conformity of tfe products.

SAFE Metal FEURST
Boulevard de la Boissonnette
42110 FEURS (FRANCE)

Echelle:

Format: A3

Project:

Approx Weight Kg :

Désignation:
LAMIER-TK10-EL

Drawing Number:

Unless otherwide specified:

Tolerances :

Draft :

Radius, Corner:

1

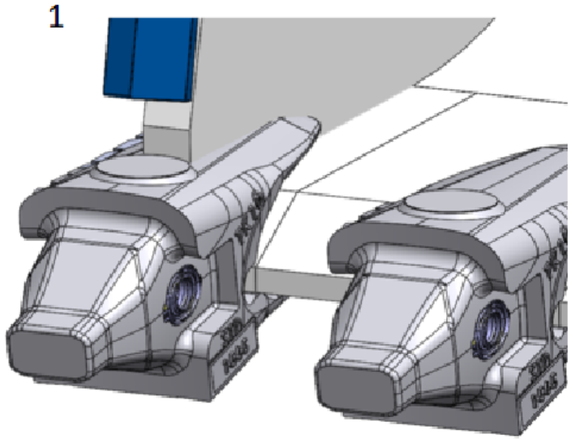

2

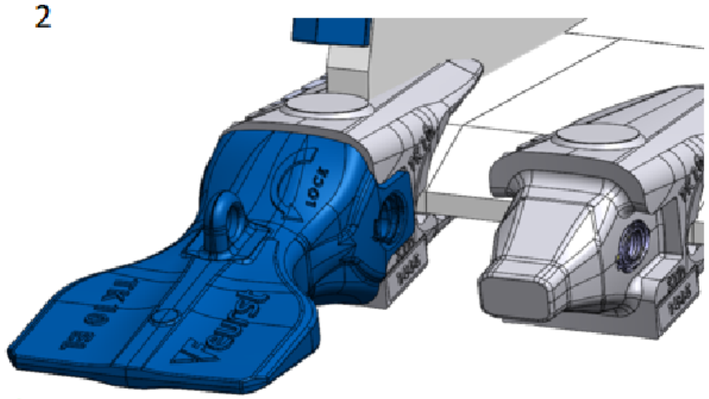

3

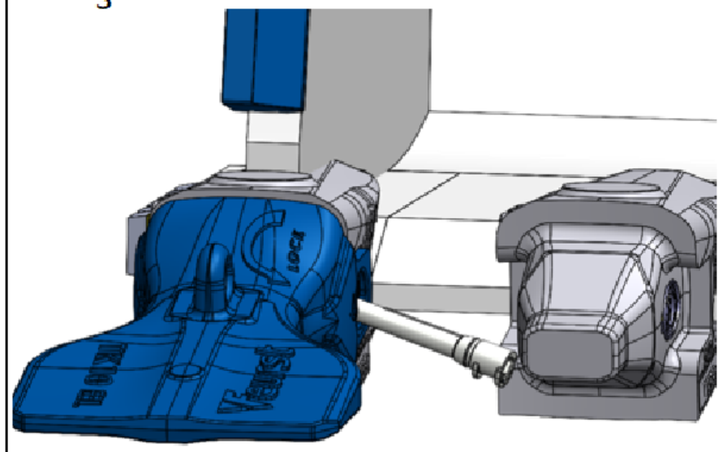

4

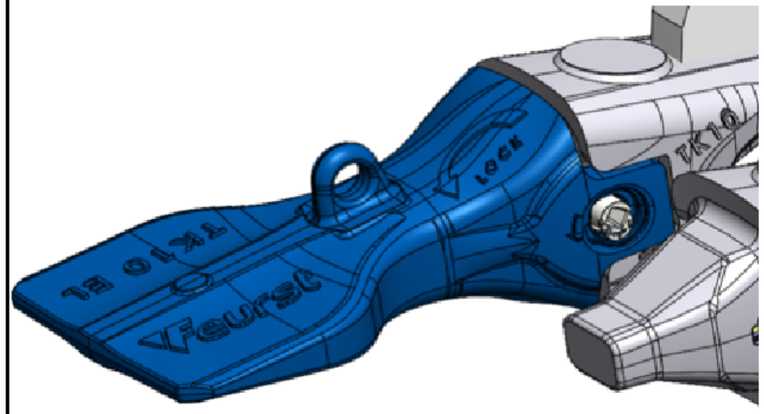

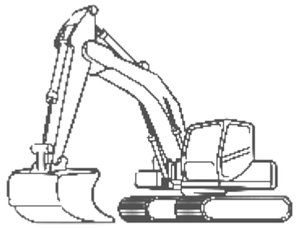

TURNKEY RHINO

Index	Date	Draw	Check	Modifications
0	25/10/2023	EC		

Ce plan (ou schema) est la propriété exclusive de SAFE Metal Toute reproduction et diffusion partielle ou totale sauf accord express écrit de notre part sont strictement interdites - conformément aux dispositions de la loi du 11 mars 1957. Notre responsabilité ne sera pas engagée par la mise en service de notre proposition. Il appartient au client de vérifier la conformité du produit proposé et son aptitude à assurer toutes les fonctions requises.
The information disclosed in this document includes proprietary rigths of SAFE Metal by accepting this document recipient agress that neither this document nor the information disclosed here in nor any part there of shall be reproduce or transfered to other documents or used or disclosed to others for developpement , manufacture or any other purpose except as authorised in writing by SAFE Metal. The acceptance of our new proposals does not commit SAFE Metal to responsability for design or function of the product,it is the customers responsability to verify and ensure themselves the functionality and conformity of tfe products.

SAFE Metal FEURST
Boulevard de la Boissonnette
42110 FEURS (FRANCE)

Echelle:

Format: A3

Project:

Approx Weight Kg :

Désignation:
LAMIER-TK10-EL

Drawing Number:

Unless otherwide specified:

Tolerances :

Draft :

Radius, Corner: